HSF

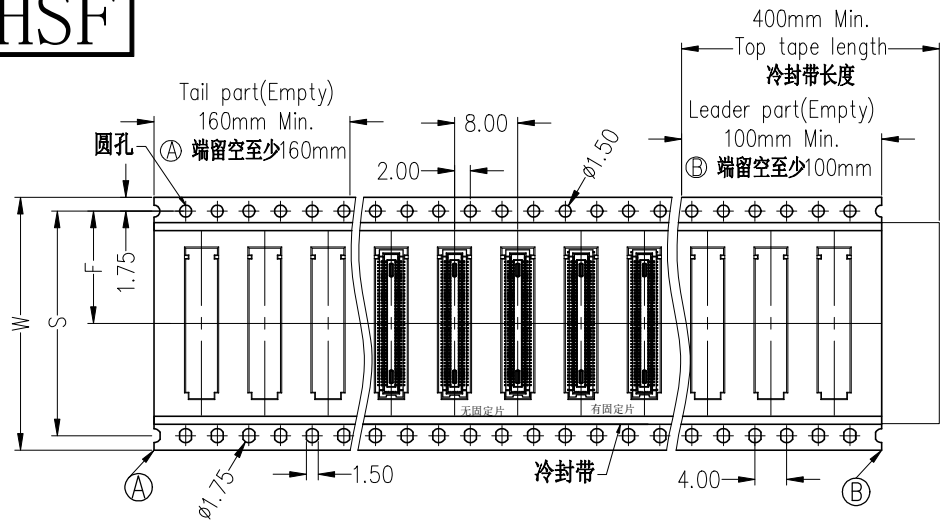

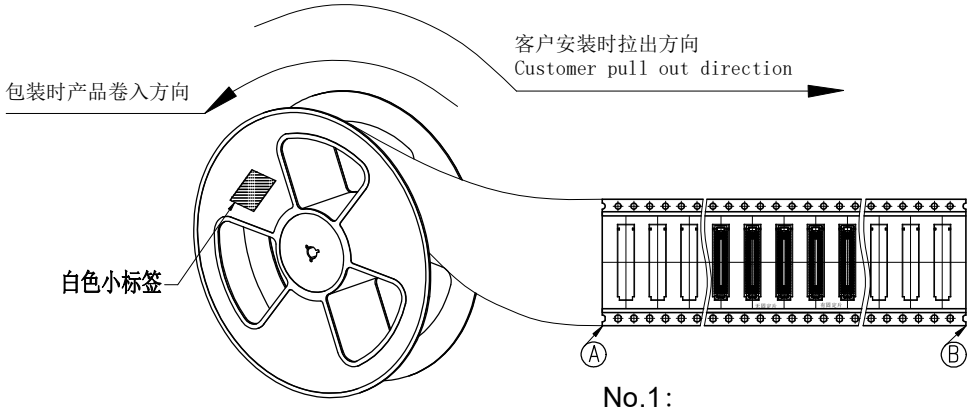

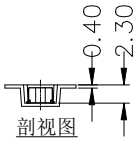

No.1:
产品包装前,注意载带要留空160mm以上
将产品放入载带凹槽后,用盖带封装,
注意:盖带与承载带的拉力30g-120g

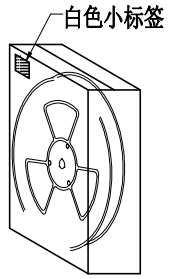

内箱：CTN-18E

No.2:
将卷盘套上PE-32防水袋,
放入1包干燥剂,
真空机封口后装入内箱,
用封箱胶封装好,并贴上标签。

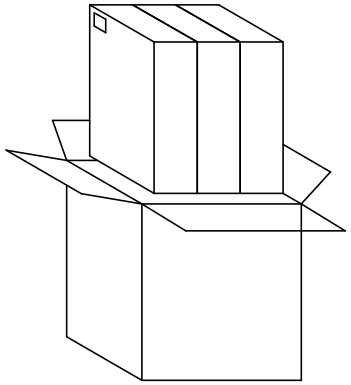

No.3:
将内箱装入外箱
(3内箱/外箱,XXPCS/外箱)
注意统一标签方向

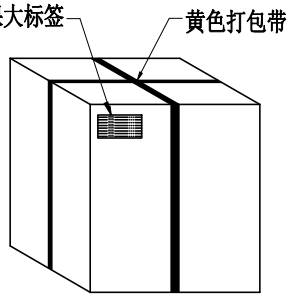

外箱：CTN-18K

No.4:
封箱,打包,贴标签。

PIN	载带料号	W	S	F	PCS/Reel	PCS/内箱	PCS/外箱
12P	TR3630-FN012M01901	16.0±0.30	/	7.50±0.15	3250	13000	39000
20P	TR3630-FN020M01901	16.0±0.30	/	7.50±0.15	3250	13000	39000
24P	TR3630-FN024M01901	16.0±0.30	/	7.50±0.15	3250	13000	39000
30P	TR3630-FN030M01901	24.0±0.30	/	11.50±0.15	3250	9750	29250
40P	TR3630-FN040M01901	24.0±0.30	/	11.50±0.15	3250	9750	29250
50P	TR3630-FN050M01901	24.0±0.30	/	11.50±0.15	3250	9750	29250
60P	TR3630-FN060M01901	24.0±0.30	/	11.50±0.15	3250	9750	29250
70P	TR3630-FN070M01901	32.0±0.30	28.40±0.15	14.20±0.15	3250	6500	19500
80P	TR3630-FN080M01901	32.0±0.30	28.40±0.15	14.20±0.15	3250	6500	19500

变更记事													
					工程图 ENGINEERING		绘图 DRAW	苏 珊	2021/07/15	SCALE	FIT	WCON	
					X.X	±0.30	设计 DESIGN			UNIT	mm	WCON ELECTRONICS (GUANGDONG) CO.,LTD	
					X.XX	±0.20				SIZE	A4	料号 PART NO.	3630-SXXX-019XXR01
A0	2021/07/15	NEW	------	------	X.XXX	±0.10	审核 CHECK			SHEET	1/1		
					Angle	± 2°	核准 APPROVE			PROJ.		品名 TITLE:	0.4mm Board to Board,XXP,SMT,Female, W/T Lock,H=1.95 卷装规范
版次 REV	日期 DATE	变更说明 MODIFICATION DESCRIPTION	变更 CHANGE	核准 APPROVE	DIM	TOL							