HSF

NOTES:
Current Rating:1.0A
Voltage Rating:250V AC,DC
Contact Resistance:20mΩ max
Withstand Voltage:500V AC/minute
Insulation Resistance:1000MΩ min
Operation Temperature:-25℃ to +85℃

Contact Material:Phosphor Bronze
Contact plating:Au Over Ni
Insulator Material:PBT+30%G.F(UL94V-0)

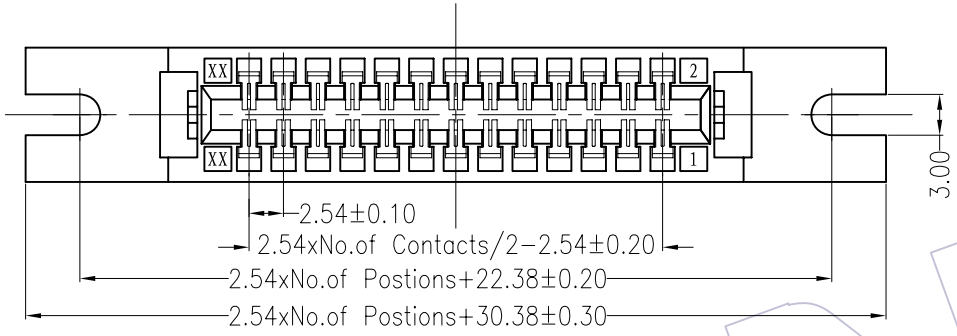

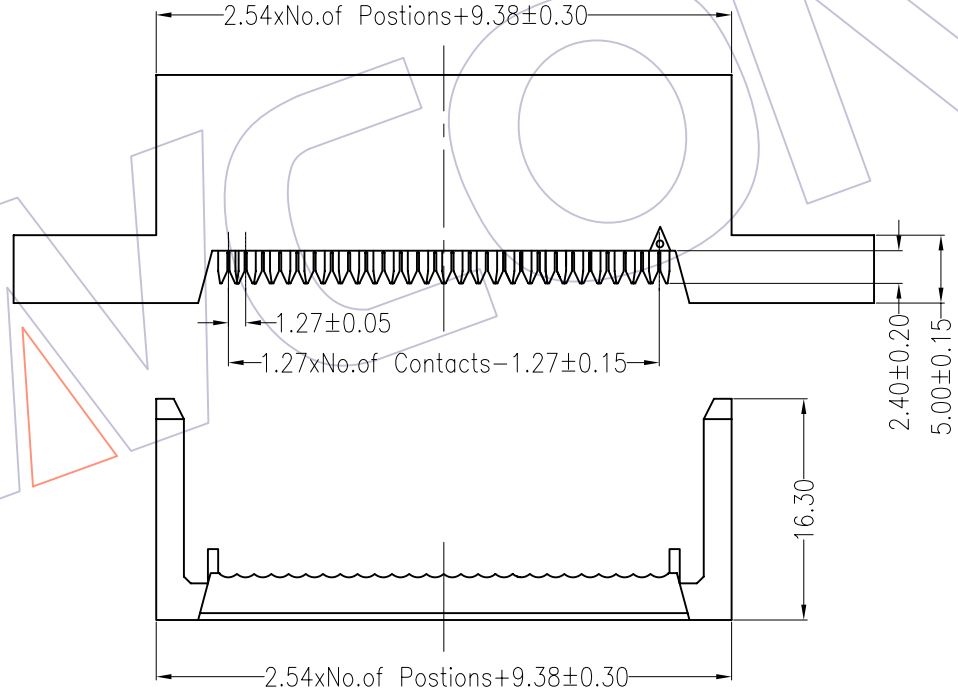

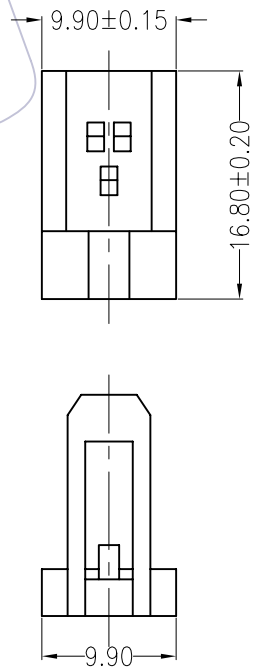

Ordering Information

5260 - XX B P XX B H X 1

No.of Pins	No.of Pins	Contact Plating	Color	Packing
10P 34P 14P 40P 16P 50P 20P 60P 26P 64P	A=With clapboard B=Without clapboard	G0=Gold Flash G1=3u"Gold G2=5u"Gold G3=10u"Gold G4=15u"Gold G5=30u"Gold S0=Gold Flash/Tin S1=3u"Gold/Tin S2=5u"Gold/Tin S3=10u"Gold/Tin S4=15u"Gold/Tin S5=30u"Gold/Tin SN=Tin	B=Black U=Blue G=Grey(427C) E=Grey(413C)	A=Tray T=Tube

REV	DATE	MODIFICATION DESCRIPTION	CHANGE	APPROVE
A0	08/11/25	NEW	———	———

OPERATION				
X.X	±0.40	DRAW	WEIXD	08.11.25
X.XX	±0.25	DESIGN		
X.XXX	±0.15	CHECK		
Angle	± 3°	APPROVE		
DIM	TOL			

SCALE	1:1
UNIT	mm
SIZE	A4
SHEET	1/1
PROJ.	

WCON 维峰五金电子有限公司
WAFE HARDWARE ELECTRONICS CO.LTD

PART NO.	5260-XXBPXXBHX1
TITLE:	CE SOCKET CONNECTOR 180°
Customer NO.	